2506/102
2507/102
AIRCRAFT ELECTRICAL
TECHNOLOGY
June/July 2017
Time: 3 hours

THE KENYA NATIONAL EXAMINATIONS COUNCIL

DIPLOMA IN AERONAUTICAL ENGINEERING
(AIRFRAMES AND ENGINES OPTION)
(AVIONICS OPTION)

MODULE I

AIRCRAFT ELECTRICAL TECHNOLOGY

3 hours

INSTRUCTIONS TO CANDIDATES

You should have the following for this examination:
Answer booklet;
Drawing instruments;
Non-programmable scientific calculator.
*This paper consists of **EIGHT** questions in **TWO** sections; **A** and **B**.*
*Answer **THREE** questions from section **A** and **TWO** questions from section **B**.*
All questions carry equal marks.
Maximum marks for each part of a question are as indicated.
Candidates should answer the questions in English.

This paper consists of 8 printed pages.

Candidates should check the question paper to ascertain that all the pages are printed as indicated and that no questions are missing.

© 2017 The Kenya National Examinations Council.

SECTION A: AIRCRAFT ELECTRICAL INSTALLATION TECHNOLOGY

*Answer **THREE** questions from this section.*

1. (a) Describe each of the following aerospace safety hazards:

   (i) lightning;
   (ii) volcanic ash.

   (6 marks)

   (b) (i) Differentiate between dip soldering and torch soldering with respect to electronic component assembly.

   (ii) Outline the procedure for preparing the soldering iron before use.

   (8 marks)

   (c) Table 1 contains a list of a safety gear components for an aircraft technician. State the function of each component.

   Table 1

	Safety Component	Function
(i)	Ear muffles	
(ii)	Face shields	
(iii)	Nose masks	

   (3 marks)

   (d) List any **three** components of an emergency medical kit found in the aircraft.

   (3 marks)

2. (a) State the functions of the following tools in aircraft electrical installation:

   (i) megger;
   (ii) die;
   (iii) crimping tool.

   (3 marks)

   (b) Outline the precautions observed when handling an aircraft equipment with electrostatic sensitive properties. (5 marks)

   (c) Explain the following with respect to aircraft maintenance:

   (i) Centralized Maintenance Systems (CMS);
   (ii) Aircraft Communication Addressing and Reporting Systems (ACARS).

   (6 marks)

(d) Draw the wiring symbols for the following electrical components used in an aircraft:

(i) ballast lamp;
(ii) generator;
(iii) heater.

(6 marks)

3. (a) Describe each of the following aircraft power sources:

(i) Auxiliary Power Unit (APU);
(ii) Ram Air Turbine (RAT).

(4 marks)

(b) With the aid of a block schematic diagram, describe the parallel power distribution of a twin engine aircraft. (8 marks)

(c) Figure 1 shows a circuit diagram of a carbon pile regulator connected to an aircraft generator. Explain its operation. (5 marks)

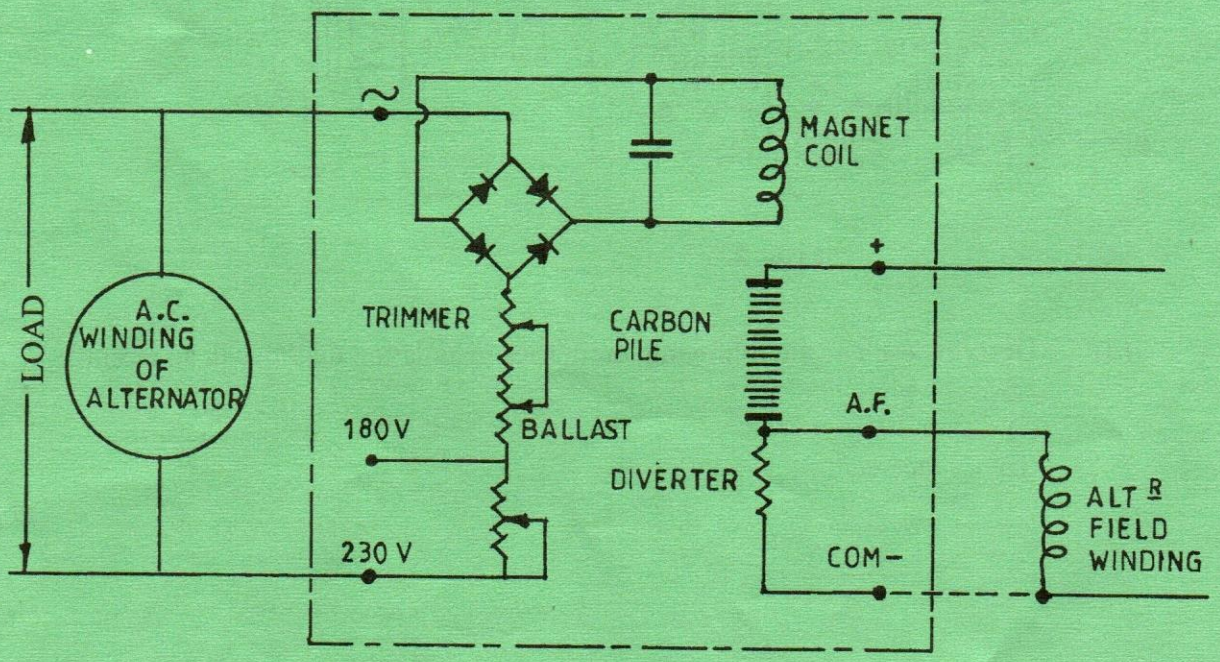

Fig. 1

Fig. 1

(d) State **three** types of cable terminations used in aircraft wiring systems.

(3 marks)

4. (a) State **four** factors considered when designing a lighting system. (4 marks)

(b) An incandescent-filament lamp suspended 2.5 m above a work bench is fitted with a reflector to give an intensity of 500 cd vertically below the lamp. Determine the:

(i) illumination on the bench vertically below the lamp;
(ii) position (x) along the bench where the illumination will be half the value in b (i) above.

(7 marks)

(c) Figure 2 shows an aircraft engine ignition system. Explain its operation. (5 marks)

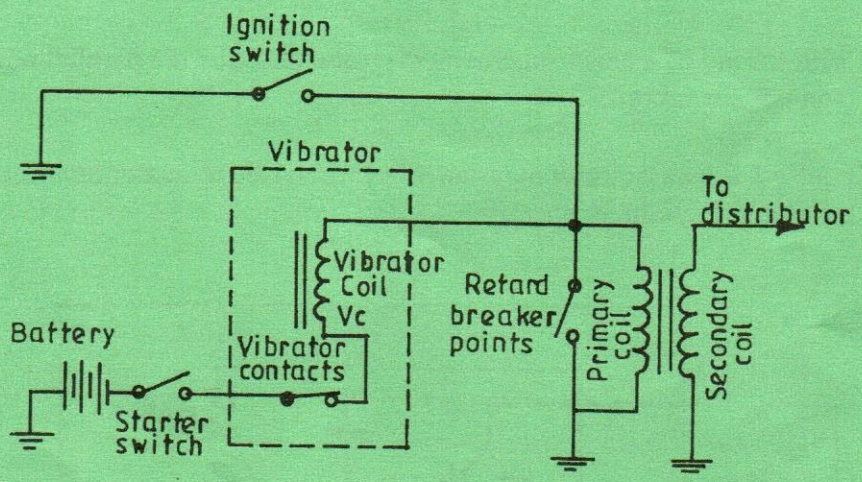

Fig. 2

(d) Describe each of the following luminaries installation methods in an aircraft:

(i) ceiling;
(ii) recessed.

(4 marks)

5. (a) Figure 3 shows a luminous call circuit used in an aircraft. Describe its operation.

(6 marks)

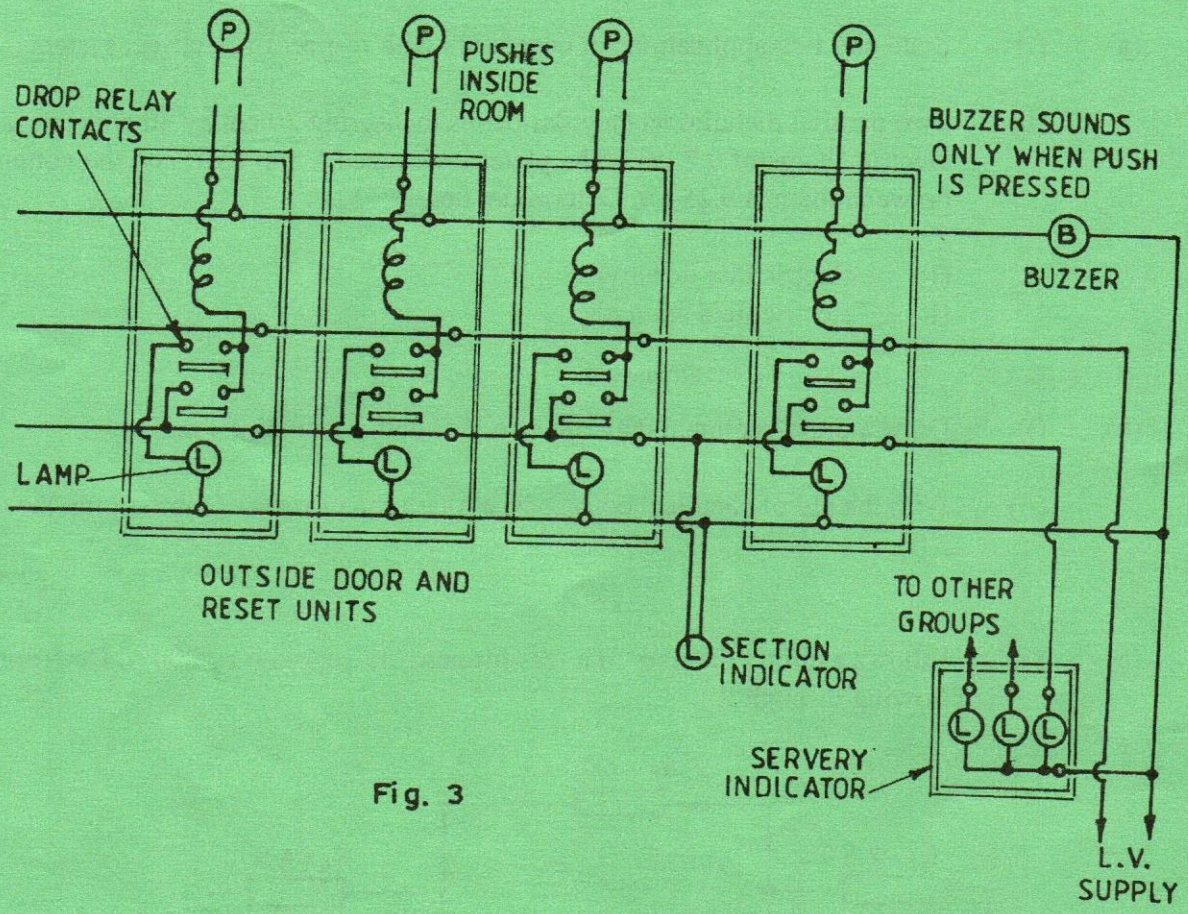

Fig. 3

(b) A 2-core copper cable supplies current to a 240V single phase load of 18 kW at 0.78 power factor. The cable is 40 metres long and each conductor has a cross-sectional area of 35 mm^2. Determine the:

(i) voltage drop in the cable at the load;
(ii) power lost in the cable.

(Take resistivity of copper as 17.5 $\mu\,\Omega$-mm)

(8 marks)

(c) With the aid of a circuit diagram, describe the testing of insulation resistance of a completed 2-wire installation consisting of lamps and other appliances.

(6 marks)

SECTION B: ELECTRICAL ENGINEERING PRINCIPLES

*Answer **TWO** questions from this section.*

6. (a) (i) State any **two** applications of capacitors with respect to electrical systems.

(ii) Two parallel metallic rectangular plates measuring 20 cm by 40 cm carry an electric charge of 0.2 μC. The plates are spaced 5 mm apart and the voltage between them is 0.25 kV. Determine the:

(I) electric flux density;
(II) electric field strength.

(8 marks)

(b) (i) Draw a cross-sectional diagram of a lead acid accumulator cell.

(ii) With the aid of chemical equations, explain the process of discharging the cell in b (i).

(7 marks)

(c) Figure 4 shows a circuit diagram of a resistor network supplied by 200 V. Determine the current flowing through R_2.

(5 marks)

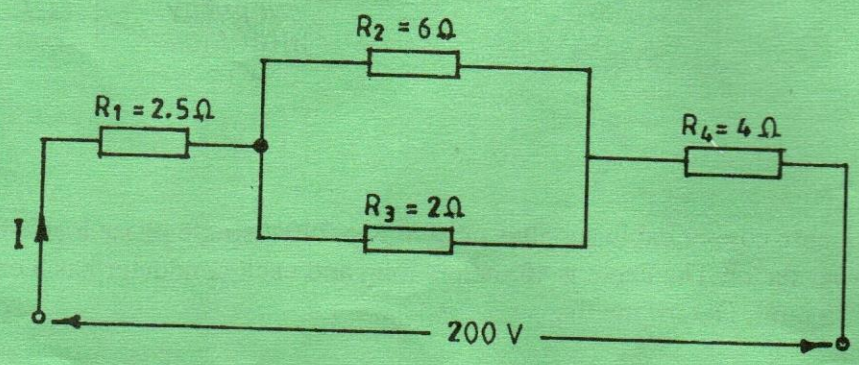

Fig. 4

7. (a) State the S.I. units used to measure the following electrical quantities:

(i) inductance;
(ii) energy;
(iii) conductance.

(3 marks)

(b) The expected value of the voltage acros a resistor is 80 V. A measurement instrument gives a value of 79V. Determine the:

(i) absolute error;
(ii) % error;
(iii) % relative accuracy.

(6 marks)

(c) With the aid of a diagram, explain the principle of operation of the attraction type moving iron instrument. (6 marks)

(d) Figure 5 shows an arrangement of instruments to measure resistance. The resistances of the ammeter and that of the voltmeter are 0.05 Ω and 350 Ω respectively. The ammeter and voltmeter readings are 5A and 35 V respectively.

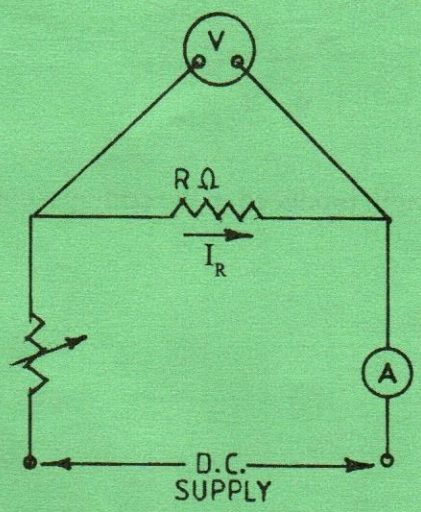

Fig. 5

Determine the resistance (R) in Ω. (5 marks)

8. (a) Define the following with respect to alternating current (A.C.) theory:

(i) period;
(ii) phase.

(2 marks)

(b) An a.c. voltage has instatenous voltage values of 0, 5, 10, 20, 50, 60, 50, 20, 10, 5, 0 for equal intervals. Determine the:

(i) r.m.s. value;
(ii) form factor.

(6 marks)

(c) With the aid of a diagram, explain the principle of operation of a single phase transformer. (6 marks)

(d) Figure 6 shows a wooden ring with a circular cross-sectional area of 300 mm^2 and a mean diameter of 200 mm. It is uniformly wound with 800 turns of a conductor wire.

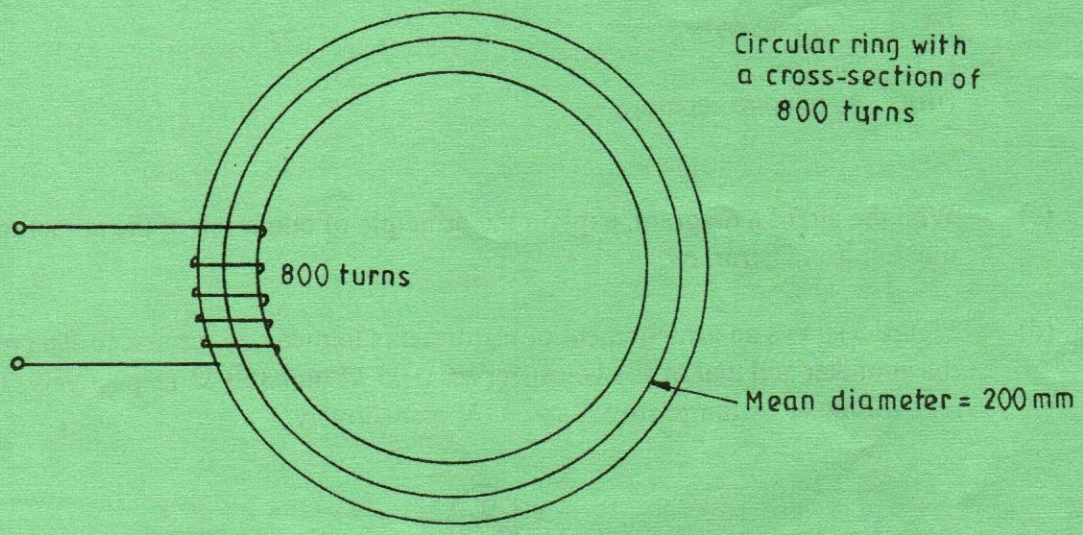

Fig. 6

Determine the field strength produced in the coil by a current of 2 amperes.

(6 marks)

THIS IS THE LAST PRINTED PAGE.